Photovoltaic Systems Engineering

Ali Karimpour
Assistant Professor
Ferdowsi University of Mashhad

Reference for this lecture:

Trishan Esram and Patrick L. Chapman."**Comparison of Photovoltaic Array Maximum Power Point Tracking Techniques,**" IEEE TRANSACTIONS ON ENERGY CONVERSION, VOL. 22, NO. 2, JUNE 2007

What is MPP?

Remember a P-V characteristic:

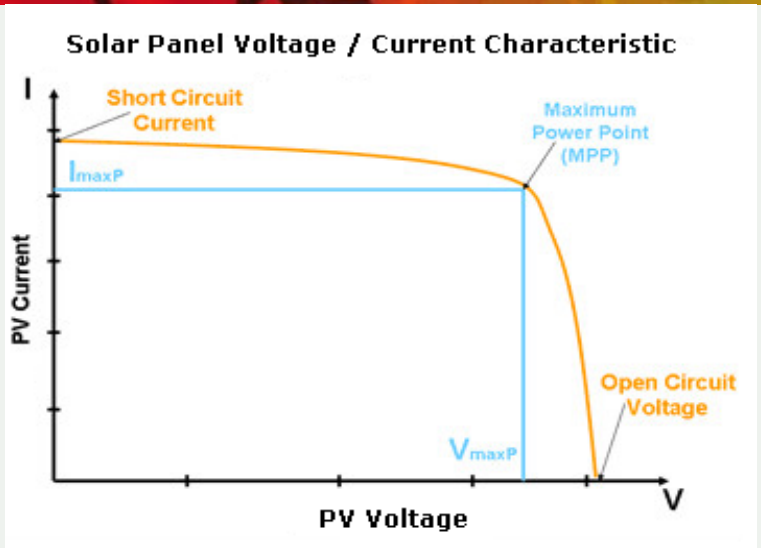

For any given set of operational conditions, cells usually have a single operating point where the values of the Current(I) and Voltage (V) of the cell result in a maximum power output.

The voltage at which PV module can produce maximum power is Called ‘maximum power point’ .

Maximum power varies with solar radiation and solar cell temperature.

Characteristic resistance

A load with resistance $R=V_{max}/I_{max}$ which draws maximum power from the device, is sometimes called the **characteristic resistance of the cell.**

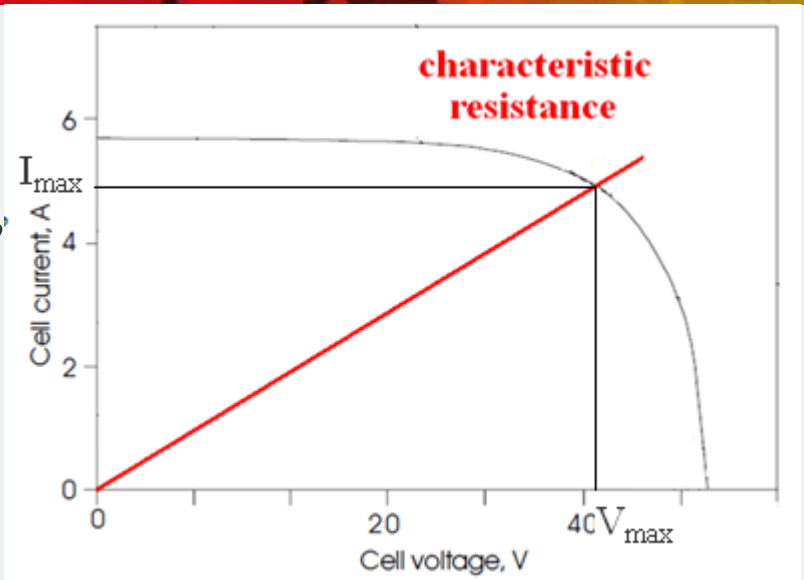

This is a dynamic quantity which changes depending on the level of illumination, as well as other factors such as temperature and the age of the cell.

Maximum power point trackers utilize different types of control circuit or logic to search for this point and thus to allow the converter circuit to extract the maximum power available from a cell.

Maximum Power Point Tracking

MPPT or Maximum Power Point Tracking is algorithm that is used for extracting maximum available power from PV module under certain conditions.

It is the purpose of the MPPT system to sample the output of the cells and apply the proper resistance (load) to obtain maximum power for any given environmental conditions.

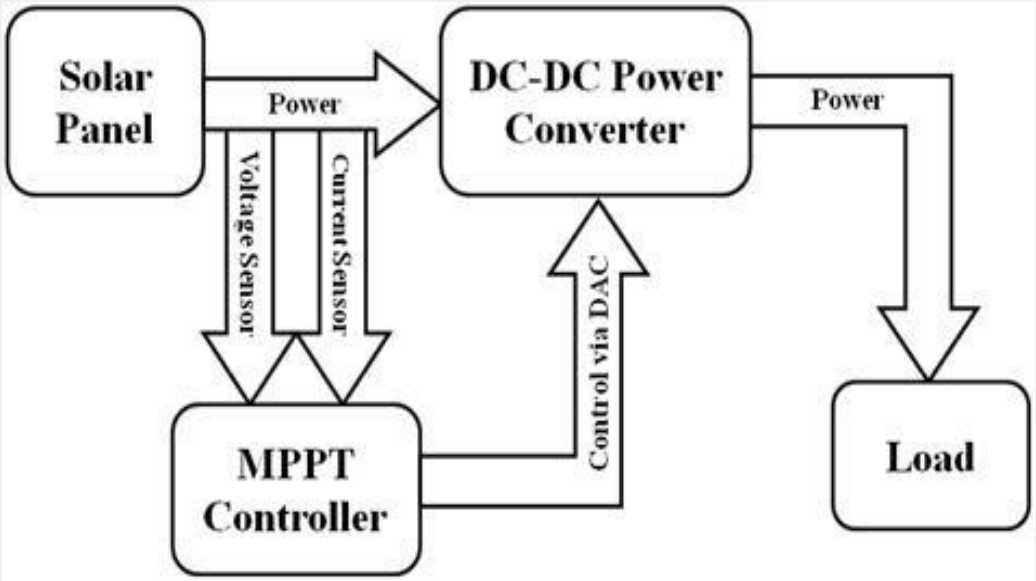

How does a MPPT work?

Output resistance R_o remains constant and by changing the duty cycle the input resistance R_i seen by the source changes. So the resistance corresponding to the peak power point is obtained by changing the duty cycle

$$\frac{V_o}{V_i} = \frac{1}{1-D}$$

$$\frac{I_o}{I_i} = 1-D$$

$$R_i = \frac{V_i}{I_i} = \frac{V_o}{I_o}(1-D)^2$$

$$R_i = R_o(1-D)^2$$

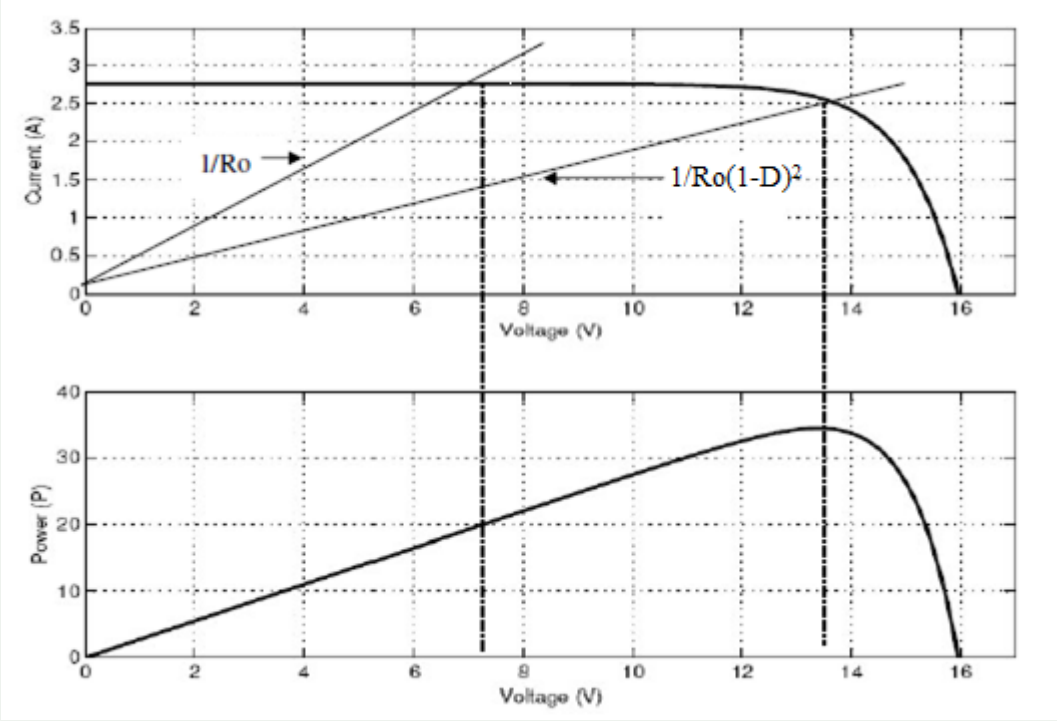

How does a MPPT work?

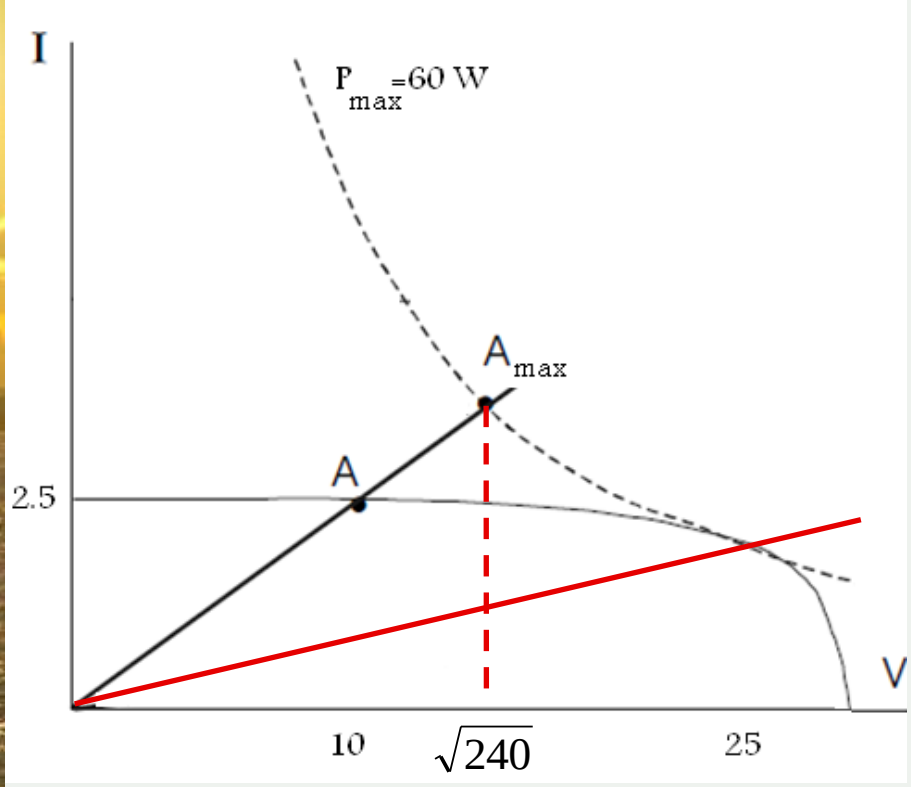

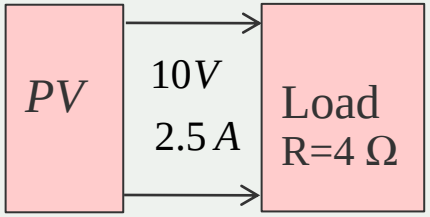

25W

$$25W \xrightarrow{?} 60W$$

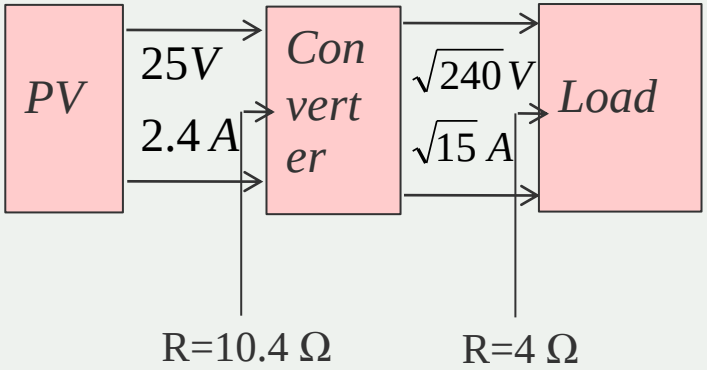

How does a MPPT work?

MPPT is used for extracting the maximum power from the solar PV module and transferring that power to the load.

A dc/dc converter acts as an interface between the load and the module.

By changing the duty cycle, the load impedance as seen by the source is varied and matched at the point of the peak power with the source so as to transfer the maximum power.

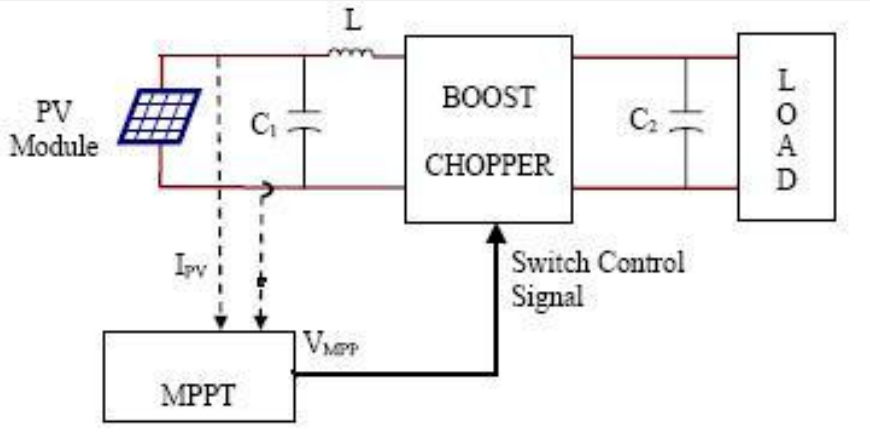

Maximum Power Point Tracking Methods

MPPT Methods

- **P&O (Perturbation and Observation)**
- Increment Conductance
- Fractional Open-Circuit Voltage
- Fractional Short-Circuit Current
- Fuzzy Logic Control
- Neural Network
- RCC (Ripple Correlation Control)
- Current Sweep
- Load Current or Load Voltage Maximization
- DC-Link Capacitor Voltage
- dP/dV or dP/dI Feedback Control

P & O (Perturbation and Observation)

P&O Involves a perturbation in the operating voltage of the PV array.

Voltage ↑ { power ↑ Left of MPP; power ↓ Right of MPP }

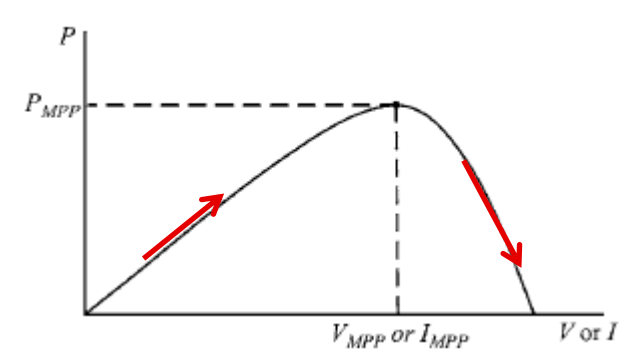

power ↑ ⇒ Subsequent perturbation : the same

power ↓ ⇒ Subsequent perturbation : the reversed

Perturbation	Change in Power	Next Perturbation
Positive	Positive	Positive
Positive	Negative	Negative
Negative	Positive	Negative
Negative	Negative	Positive

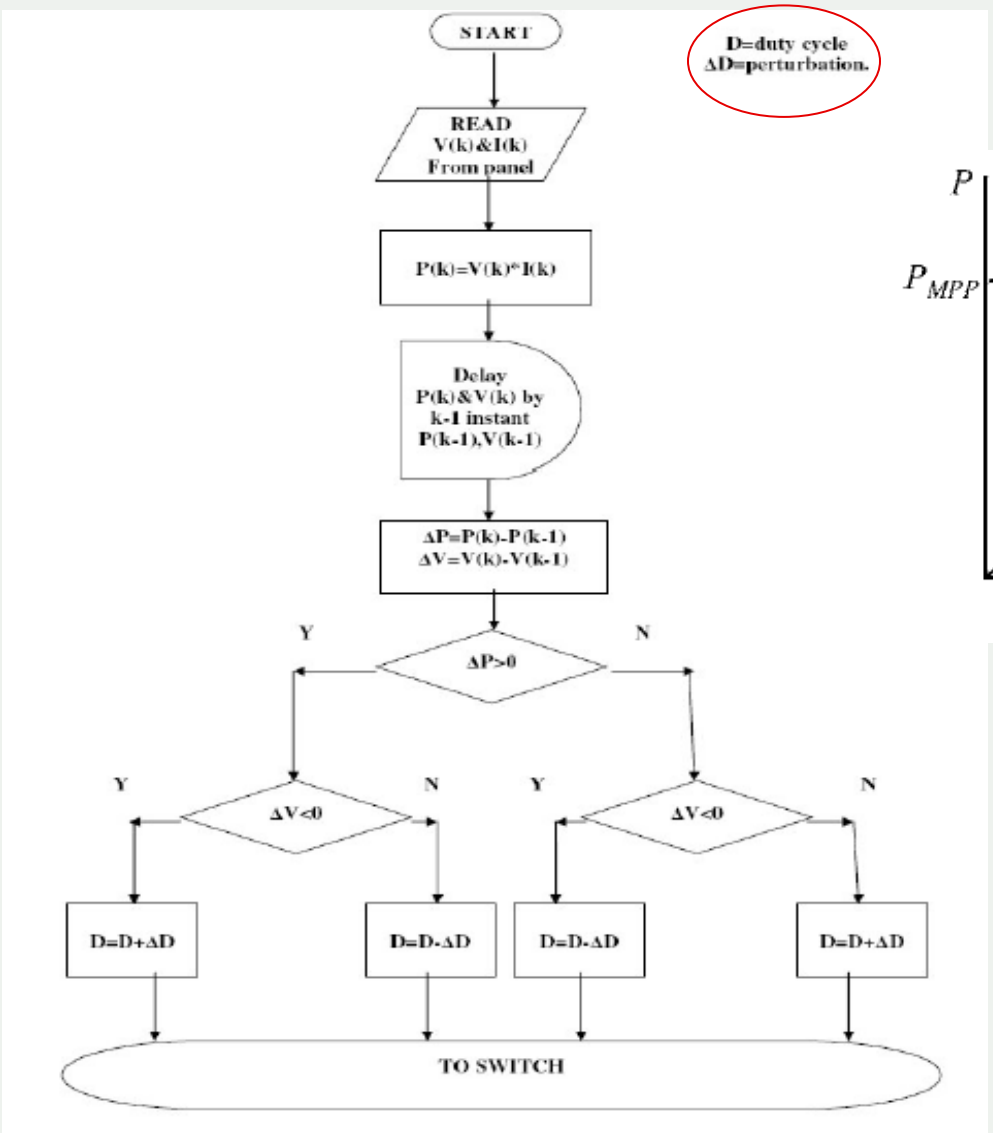

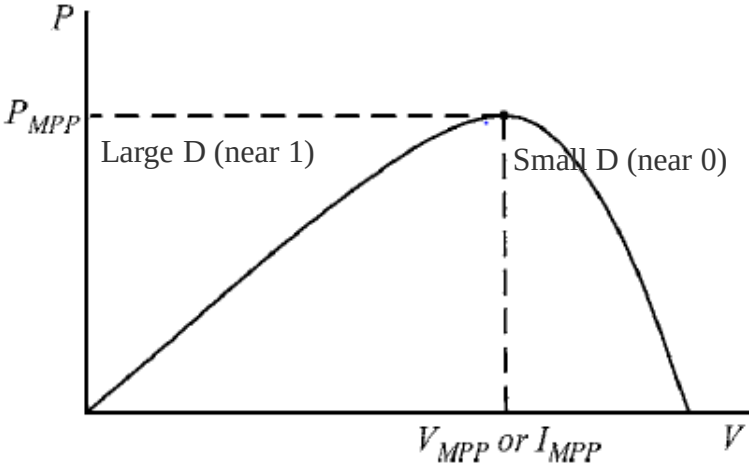

For a buck converter

P & O (Perturbation and Observation)

The process is repeated periodically until the MPP is reached.

The system then oscillates around the MPP.

The oscillation can be minimized by reducing the perturbation step size.

Solution:
- Variable step size algorithm
- Two-stage algorithm

P & O (Perturbation and Observation)

P&O methods can fail under rapidly changing atmospheric conditions.

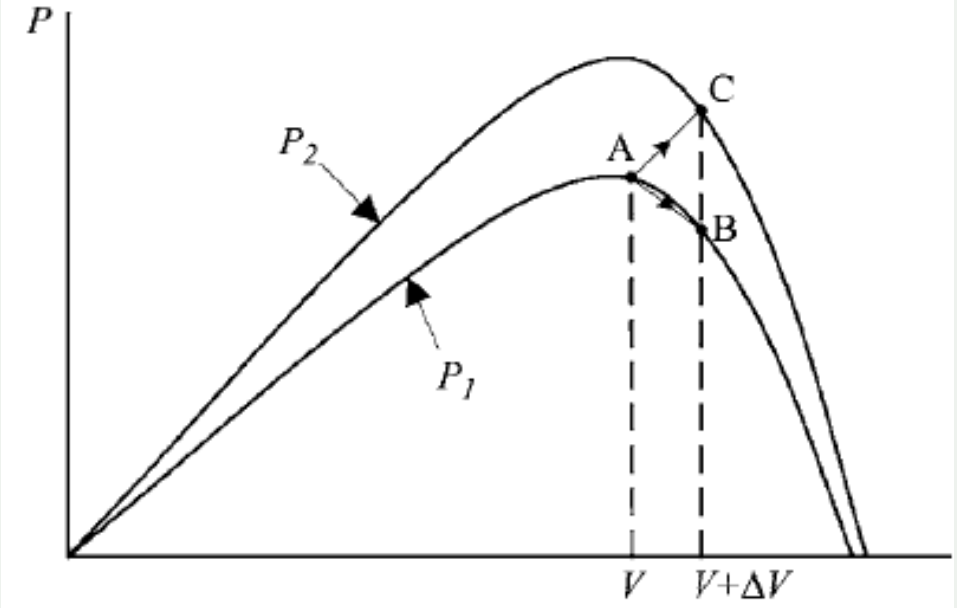

Starting from point A :

Voltage increases by ΔV

- Fixed Irradiance ⇒ Power ↓ ⇒ Reversed perturbation ✓
- Irradiance ↑ increased ⇒ Power ↑ ⇒ ~~Perturbation is kept the same!!~~

Solution : Three-point weight comparison P&O method

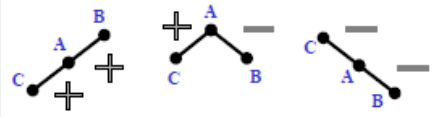

Maximum Power Point Tracking Methods

MPPT Methods

- P&O (Perturbation in the Operating voltage)
- **Increment Conductance**
- Fractional Open-Circuit Voltage
- Fractional Short-Circuit Current
- Fuzzy Logic Control
- Neural Network
- RCC (Ripple Correlation Control)
- Current Sweep
- Load Current or Load Voltage Maximization
- DC-Link Capacitor Droop Voltage
- dP/dV or dP/dI Feedback Control

Incremental Conductance

$$\begin{cases} dP/dV = 0, & \text{at MPP} \\ dP/dV > 0, & \text{left of MPP} \\ dP/dV < 0, & \text{right of MPP.} \end{cases}$$

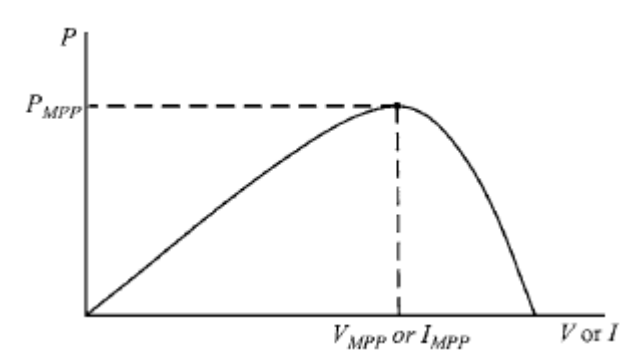

$$\frac{dP}{dV} = \frac{d(IV)}{dV} = I + V\frac{dI}{dV} \cong I + V\frac{\Delta I}{\Delta V}$$

$$\begin{cases} \Delta I/\Delta V = -I/V, & \text{at MPP} \\ \Delta I/\Delta V > -I/V, & \text{left of MPP} \\ \Delta I/\Delta V < -I/V, & \text{right of MPP.} \end{cases}$$

The MPP can thus be tracked by comparing the instantaneous conductance (I/V) to the incremental conductance (ΔI/ΔV)

Incremental Conductance

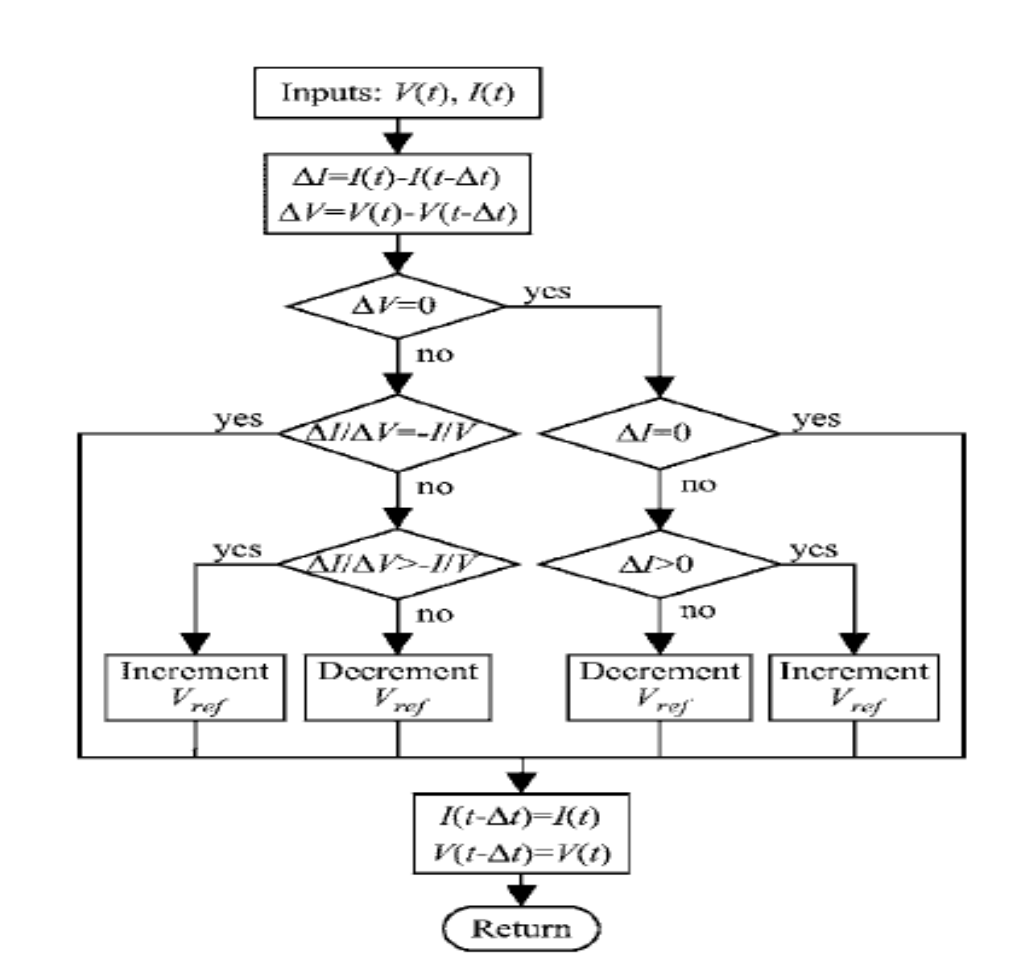

V_{ref} is the reference voltage at which the PV array is forced to operate.

Incremental Conductance

- Once the MPP is reached, the operation of the PV array is maintained at this point unless a change in ΔI is noted, indicating a change in atmospheric conditions and the MPP.

- Fast tracking can be achieved with bigger increments but the system might not operate exactly at the MPP and oscillate about it instead; so we need a tradeoff

- The increment size determines how fast the MPP is tracked.

Maximum Power Point Tracking Methods

MPPT Methods

- P&O (Perturbation in the Operating voltage)
- Increment Conductance
- **Fractional Open-Circuit Voltage**
- Fractional Short-Circuit Current
- Fuzzy Logic Control
- Neural Network
- RCC (Ripple Correlation Control)
- Current Sweep
- Load Current or Load Voltage Maximization
- DC-Link Capacitor Droop Voltage
- dP/dV or dP/dI Feedback Control

Fractional Open-Circuit Voltage

The near linear relationship between V_{MPP} and V_{OC} of the PV array, under varying irradiance and temperature levels, has given rise to the fractional V_{OC} method.

$$V_{mpp} \approx k_1 V_{oc} \qquad 0.71 < k_1 < 0.78$$

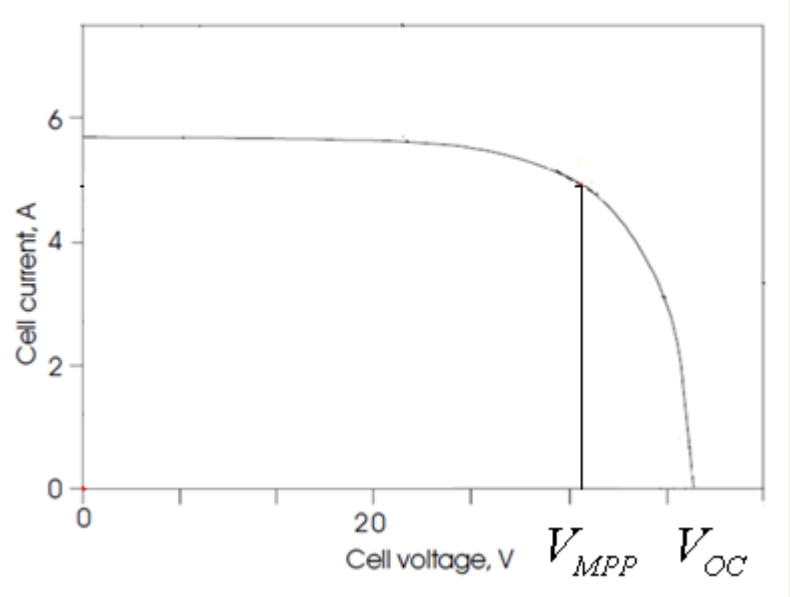

- k_1 is dependent on the characteristics of the PV array being used.
- V_{OC} is measured periodically by momentarily shutting down the power converter.
- Disadvantage : Temporary loss of power

Fractional Open-Circuit Voltage

Voltage generated by pn-junction diodes is approximately 75% of VOC

$$V_{junction} \approx 0.75 V_{oc}$$

This eliminates the need for measuring V_{OC} and computing V_{MPP} .

Once VMPP has been approximated, a closed-loop control on the array power converter can be used to asymptotically reach this desired voltage.

This method is only an approximation so, the PV array technically never operates at the MPP.

It is very easy and cheap to implement as it does not necessarily require DSP or microcontroller control.

Maximum Power Point Tracking Methods

MPPT Methods

- P&O (Perturbation in the Operating voltage)
- Increment Conductance
- Fractional Open-Circuit Voltage
- **Fractional Short-Circuit Current**
- Fuzzy Logic Control
- Neural Network
- RCC (Ripple Correlation Control)
- Current Sweep
- Load Current or Load Voltage Maximization
- DC-Link Capacitor Droop Voltage
- dP/dV or dP/dI Feedback Control

Fractional Short-Circuit Current

Under varying atmospheric conditions, I_{MPP} is approximately linearly related to the I_{SC} of the PV array.

$$I_{mpp} \approx k_2 I_{sc} \qquad 0.78 < k_2 < 0.92$$

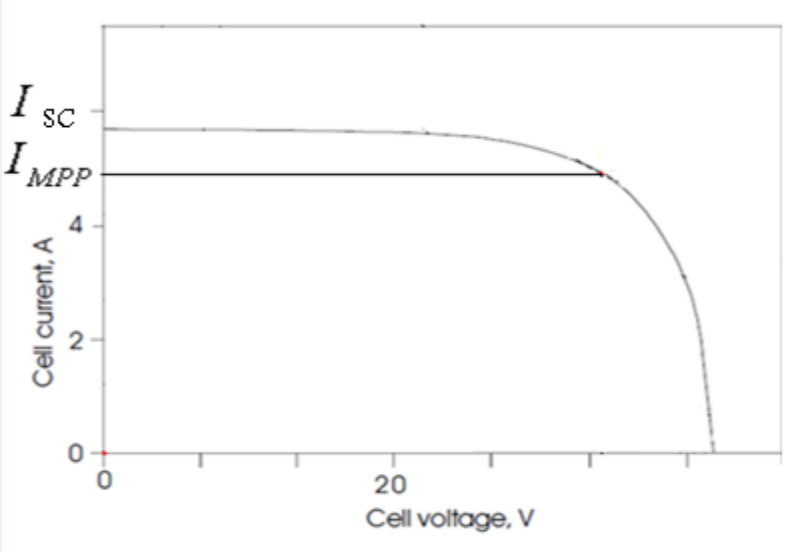

Measuring I_{SC} during operation is problematic.

An additional switch usually has to be added to the power converter to periodically short the PV array so that ISC can be measured using a current sensor.

This increases the number of components and cost.

Most of the PV systems using fractional I_{SC} in the literature use a DSP

Maximum Power Point Tracking Methods

MPPT Methods

- P&O (Perturbation in the Operating voltage)
- Increment Conductance
- Fractional Open-Circuit Voltage
- Fractional Short-Circuit Current
- **Fuzzy Logic Control**
- Neural Network
- RCC (Ripple Correlation Control)
- Current Sweep
- Load Current or Load Voltage Maximization
- DC-Link Capacitor Droop Voltage
- dP/dV or dP/dI Feedback Control

Fuzzy Logic Control

Microcontrollers have made using fuzzy logic control popular for MPPT over the last decade.

Fuzzy logic control generally consists of three stages:

1. Fuzzification
2. Rule base table
3. Defuzzification

Fuzzy Logic Control

1. Fuzzification

Numerical input variables are converted into linguistic variables based on a membership function

The inputs are error E and change in error ΔE.

$$E(n) = \frac{P(n) - P(n-1)}{V(n) - V(n-1)}$$

$$\Delta E(n) = E(n) - E(n-1)$$

five fuzzy levels are used: NB (negative big), NS (negative small), ZE (zero), PS (positive small), and PB (positive big)

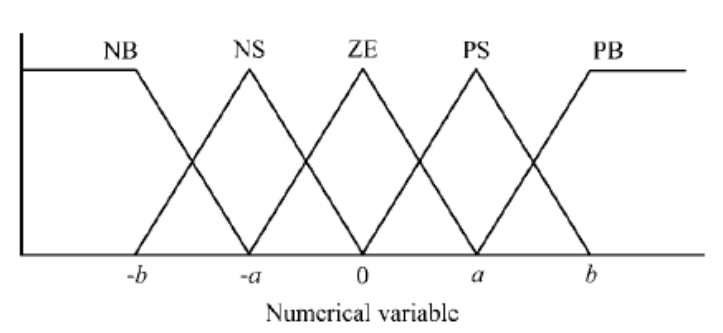

Fuzzy Logic Control

2. Rule base table

Fuzzy logic controller output, which is typically a change in duty ratio ΔD of the power converter, can be looked up in a rule base table.

E \ ΔE	NB	NS	ZE	PS	PB
NB	ZE	ZE	NB	NB	NB
NS	ZE	ZE	NS	NS	NS
ZE	NS	ZE	ZE	ZE	PS
PS	PS	PS	PS	ZE	ZE
PB	PB	PB	PB	ZE	ZE

E is PB, and ΔE is ZE, then we want to largely increase the duty ratio, that is ΔD should be PB to reach the MPP.

Fuzzy Logic Control

3. Defuzzification

Fuzzy logic controller output is converted from a linguistic variable to a numerical variable still using a membership function

This provides an analog signal that will control the power converter to the MPP.

Fuzzy Logic Control

❖The effectiveness depends a lot on the knowledge of the user in :

1.choosing the right error computation

2. coming up with the rule base table.

❖MPPT fuzzy logic controllers have been shown to perform well under varying atmospheric conditions.

Maximum Power Point Tracking Methods

MPPT Methods

- P&O (Perturbation in the Operating voltage)
- Increment Conductance
- Fractional Open-Circuit Voltage
- Fractional Short-Circuit Current
- Fuzzy Logic Control
- **Neural Network**
- RCC (Ripple Correlation Control)
- Current Sweep
- Load Current or Load Voltage Maximization
- DC-Link Capacitor Droop Voltage
- dP/dV or dP/dI Feedback Control

Neural Network

Along with fuzzy logic controllers came another technique of implementing MPPT-neural networks, which are also well adapted for microcontrollers.

❖Neural networks commonly have three layers:

1. Input layer 2. Hidden layer 3. Output layer

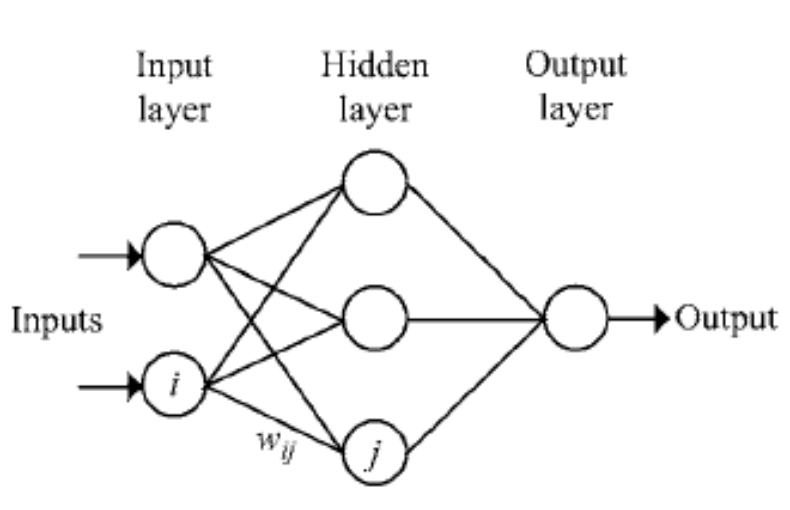

Neural Network

❖The input variables can be :

1. PV array parameters like V_{OC} and I_{SC}
2. Atmospheric data like irradiance and temperature

or any combination of these.

❖The output is usually one or several reference signal(s) like a duty cycle signal.

❖To accurately identify the MPP, the w_{ij}'s have to be carefully determined through a training process.

❖Since most PV arrays have different characteristics, a neural network has to be specifically trained for the PV array with which it will be used.

Maximum Power Point Tracking Methods

MPPT Methods

- P&O (Perturbation in the Operating voltage)
- Increment Conductance
- Fractional Open-Circuit Voltage
- Fractional Short-Circuit Current
- Fuzzy Logic Control
- Neural Network
- **RCC (Ripple Correlation Control)**
- Current Sweep
- Load Current or Load Voltage Maximization
- DC-Link Capacitor Droop Voltage
- dP/dV or dP/dI Feedback Control

RCC (Ripple Correlation Control)

When a PV array is connected to a power converter, the switching action of the power converter imposes voltage and current ripple on the PV array.

Ripple correlation control (RCC) makes use of ripple to perform MPPT.

RCC correlates time derivative of time varying PV array power with time derivative of PV array current or voltage to drive the power gradient to zero.

RCC (Ripple Correlation Control)

$(\dot{v} > 0 \text{ or } \dot{i} > 0)$

$(\dot{p} > 0) \longrightarrow (V < V_{MPP} \text{ or } I < I_{MPP})$ Right of MPP

$(\dot{p} < 0) \longrightarrow (V > V_{MPP} \text{ or } I > I_{MPP})$ Left of MPP

$\dot{p}\dot{v}$ or $\dot{p}\dot{i}$

+	left of MPP
-	right of MPP
0	MPP

RCC (Ripple Correlation Control)

$i<i_{mpp}$

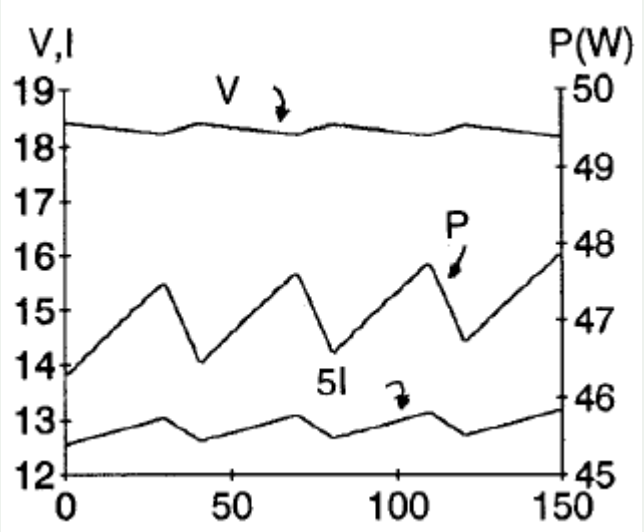

$i>i_{mpp}$

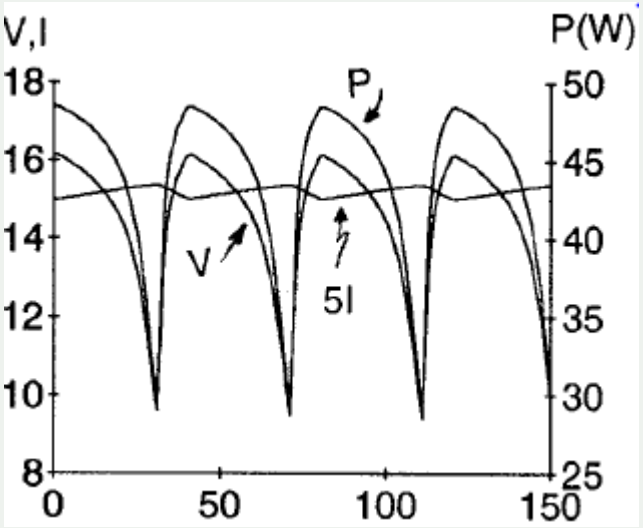

$i=i_{mpp}$

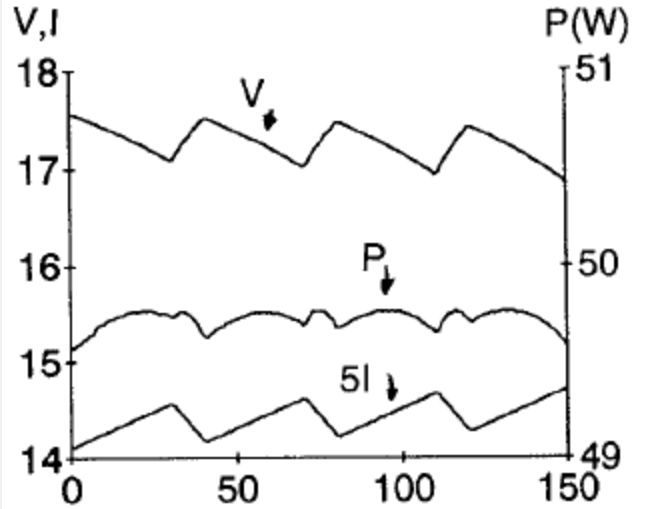

RCC (Ripple Correlation Control)

The duty ratio control input is :

$$d(t) = -k_3 \int \dot{p}\dot{v}\, dt$$

or

$$d(t) = k_3 \int \dot{p}\dot{i}\, dt$$

When the power converter is a boost converter, increasing the duty ratio increases the inductor current, which is the same as the PV array current, but decreases the PV array voltage.

The derivatives are usually undesirable, but ac-coupled measurements of the PV array current and voltage can be used since they contain the necessary phase information.

RCC (Ripple Correlation Control)

❖RCC accurately and quickly tracks the MPP, even under varying irradiance levels.

❖ Simple and inexpensive analog circuits can be used to implement RCC.

❖Another advantage of RCC is that it does not require any prior information about the PV array characteristics, making its adaptation to different PV systems straightforward.

❖The time taken to converge to the MPP is limited by the switching frequency of the power converter and the gain of the RCC circuit.

Maximum Power Point Tracking Methods

MPPT Methods

- P&O (Perturbation in the Operating voltage)
- Increment Conductance
- Fractional Open-Circuit Voltage
- Fractional Short-Circuit Current
- Fuzzy Logic Control
- Neural Network
- RCC (Ripple Correlation Control)
- **Current Sweep**
- Load Current or Load Voltage Maximization
- DC-Link Capacitor Droop Voltage
- dP/dV or dP/dI Feedback Control

Current Sweep

The current sweep method uses a sweep waveform for the PV array current such that the I–V characteristic of the PV array is obtained and updated at fixed time intervals.

The function chosen for the sweep waveform :

$$f(t) = k_4 \frac{df(t)}{dt} \Rightarrow f(t) = C \exp[t/k_4] \Rightarrow f(t) = I_{\max} \exp[-t/\tau].$$

The current in can be easily obtained by using some current discharging through a capacitor.

$$p(t) = v(t)\, i(t) = v(t)\, f(t).$$

At the MPP:

$$\frac{dp(t)}{dt} = v(t)\frac{df(t)}{dt} + f(t)\frac{dv(t)}{dt} = 0.$$

Current Sweep

$$\frac{dp(t)}{dt} = \left[v(t) + k_4 \frac{dv(t)}{dt}\right] \frac{df(t)}{dt} = 0. \Rightarrow \frac{dp(t)}{di(t)} = v(t) + k_4 \frac{dv(t)}{dt} = 0.$$

In the current sweep method is implemented through analog computation.

Block schemes of the MPP computing unit:

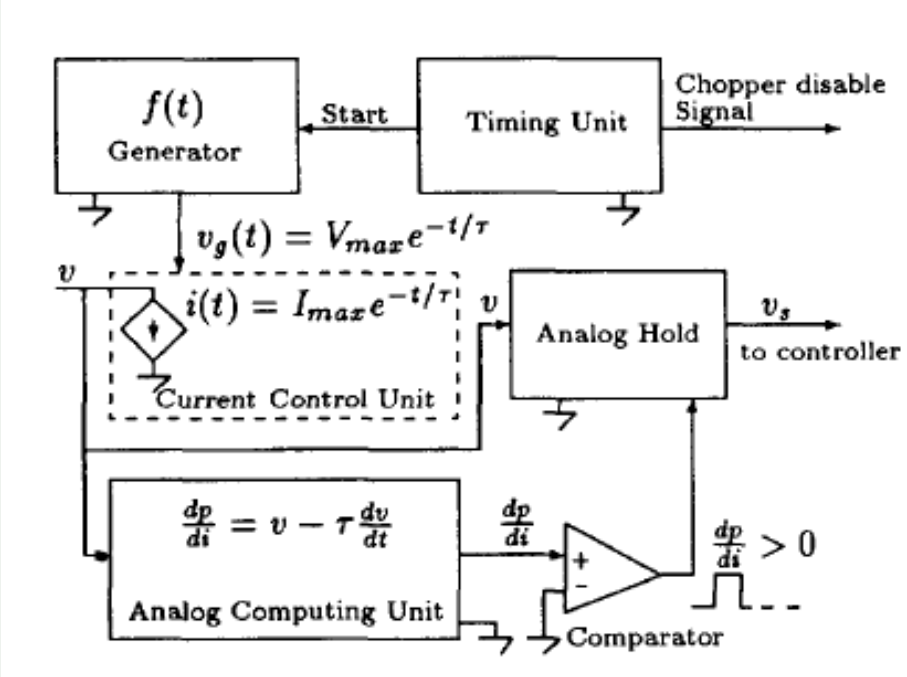

Current Sweep

The current sweep takes about 50 ms, implying some loss of available power.

It is pointed out that this MPPT technique is only feasible if the power consumption of the tracking unit is lower than the increase in power that it can bring to the entire PV system.

Maximum Power Point Tracking Methods

MPPT Methods

- P&O (Perturbation in the Operating voltage)
- Increment Conductance
- Fractional Open-Circuit Voltage
- Fractional Short-Circuit Current
- Fuzzy Logic Control
- Neural Network
- RCC (Ripple Correlation Control)
- Current Sweep
- **Load Current or Load Voltage Maximization**
- DC-Link Capacitor Droop Voltage
- dP/dV or dP/dI Feedback Control

Load Current or Load Voltage Maximization

Traditional control via input parameters

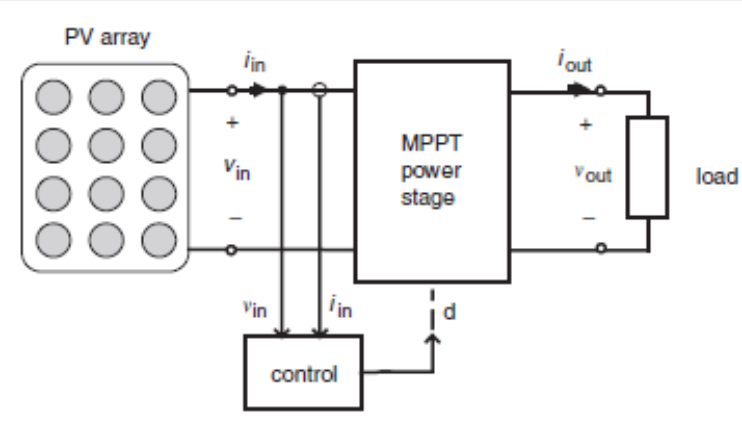

Output parameters are sensed for protection anyways

Proposed control via output parameters

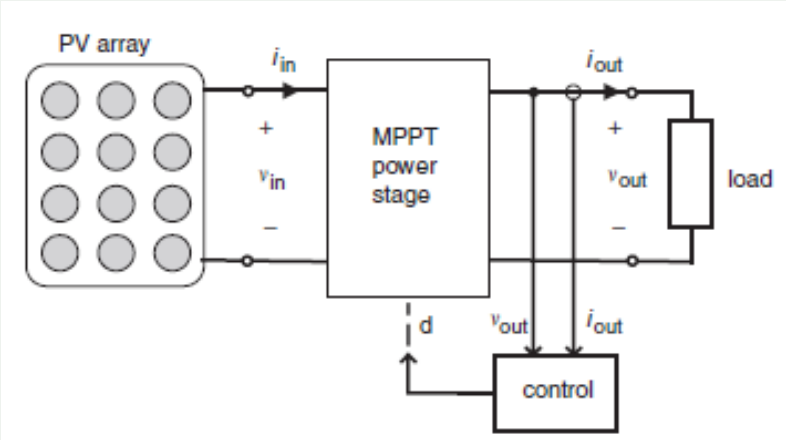

NO additional costs

Load Current or Load Voltage Maximization

Most Loads :
- Voltage-source type
- Current-source type
- Resistive type
- Combination

Voltage-source type: i_{out} : max ⇨ Output power : max

Current-source type: v_{out} : max ⇨ Output power : max

Other load types: i_{out} or v_{out} can be used.

Also true for nonlinear loads as long as they do not exhibit negative impedance.

Load Current or Load Voltage Maximization

Different load types: 1.voltage source 2.resistive 3.resistive and voltage source 4.current source,

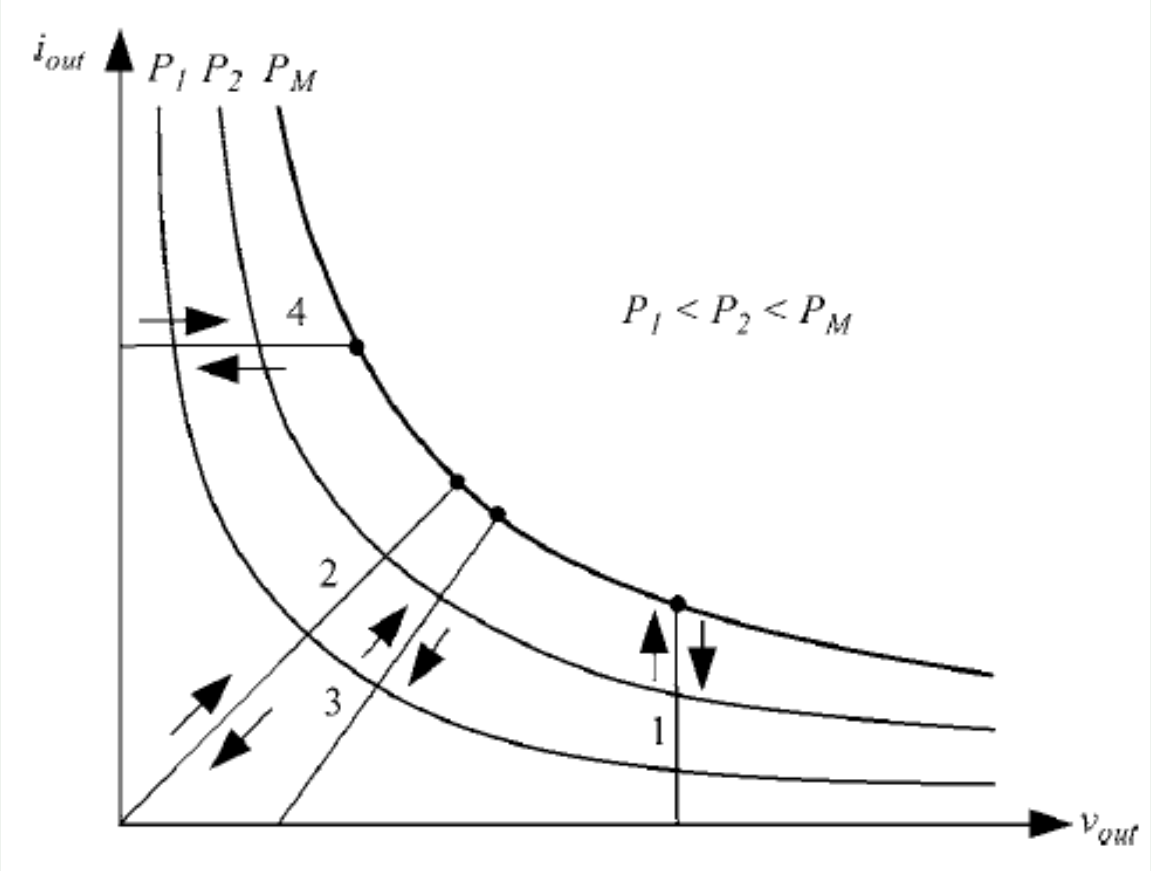

Load Current or Load Voltage M

Voltage-source type:

i_{out} : max ⇨ Output power : max

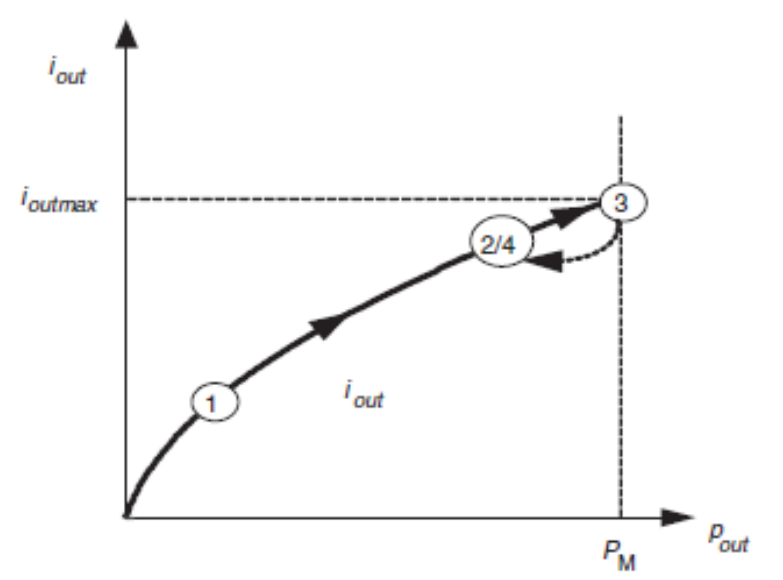

Change in d ⇨

I ↑ The same c

I ↓ Reversed c

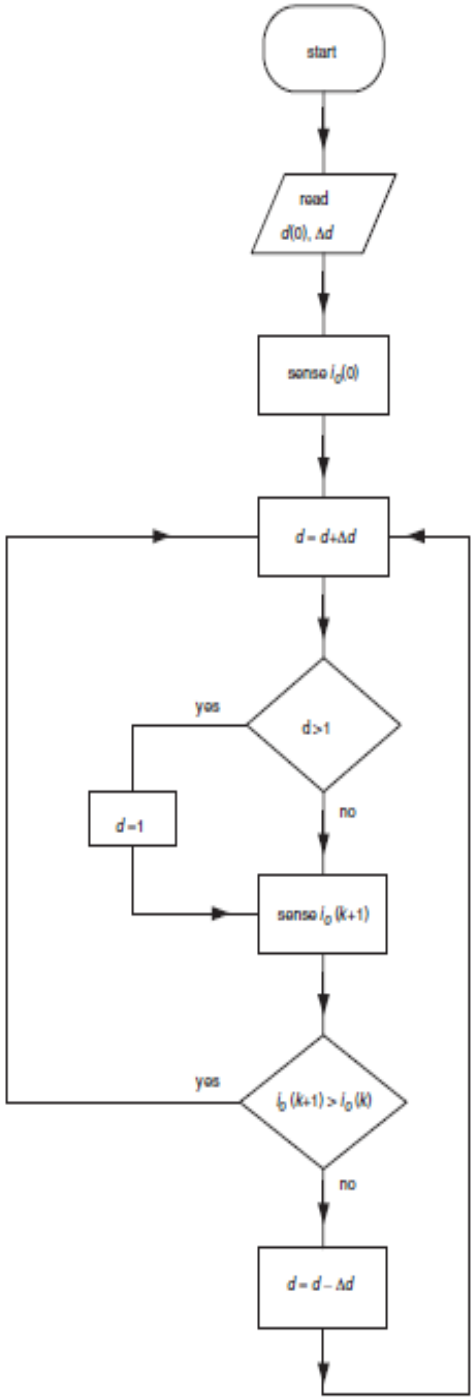

Load Current or Load Voltage Maximization

Current-source type:

Current-source type: v_{out} : max ⇨ Output power : max

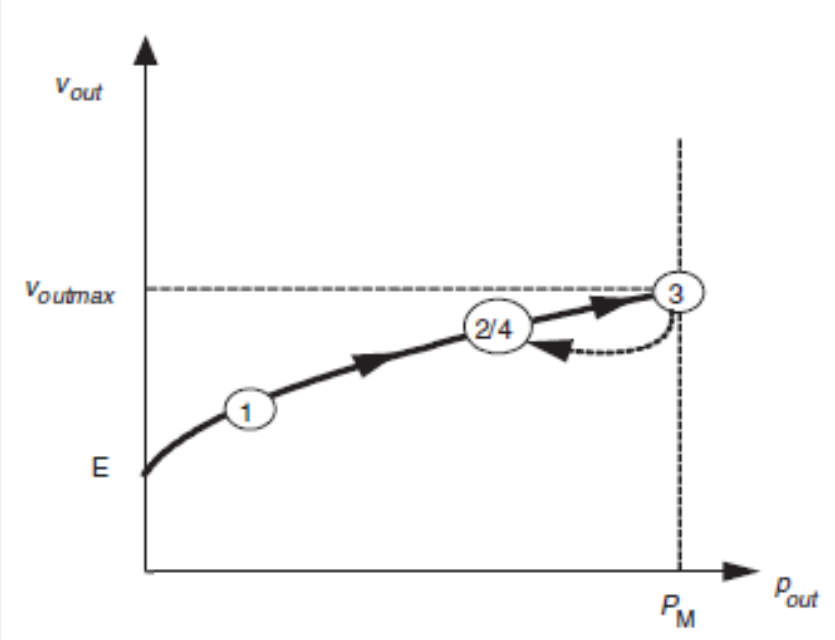

Change in d ⇨

- V ↑ The same change
- V ↓ Reversed change

Load Current or Load Voltage Maximization

Advantages :

Sensing of a single output parameter.

No need for a multiplier ⇨
- Simplified hardware(analog)
- Simplified algorithm(digital)

Disadvantage :

Operation exactly at the MPP is almost never achieved because this MPPT method is based on the assumption that the power converter is lossless.

Maximum Power Point Tracking Methods

MPPT Methods

- P&O (Perturbation in the Operating voltage)
- Increment Conductance
- Fractional Open-Circuit Voltage
- Fractional Short-Circuit Current
- Fuzzy Logic Control
- Neural Network
- RCC (Ripple Correlation Control)
- Current Sweep
- Load Current or Load Voltage Maximization
- **DC-Link Capacitor Droop Voltage**
- dP/dV or dP/dI Feedback Control

DC-Link Capacitor Droop Voltage

Specifically designed to work with a PV system that is connected in parallel with an ac system line.

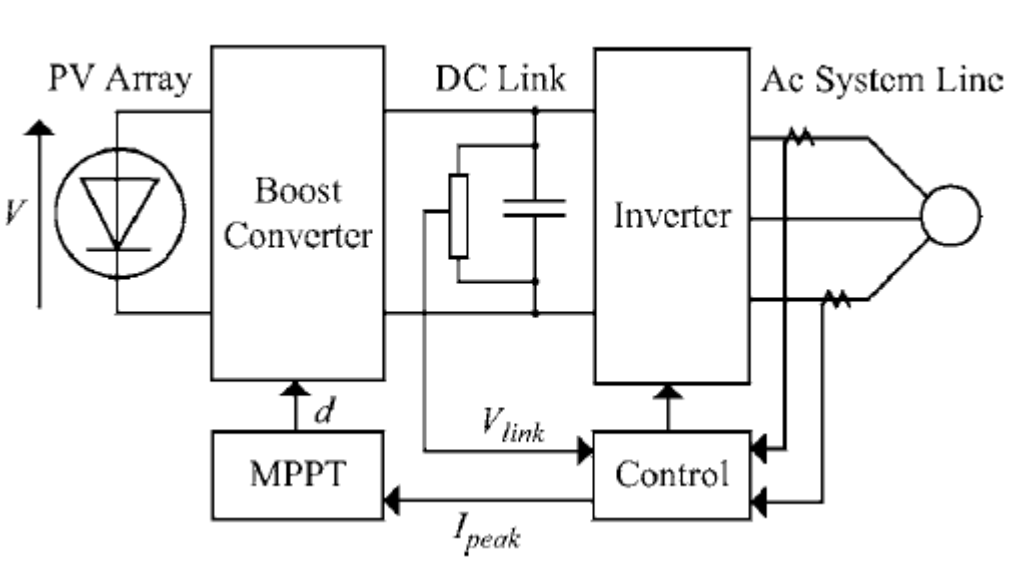

$$d = 1 - \frac{V}{V_{link}}$$

DC-Link Capacitor Droop Voltage

Operation Principle :

V_{link} is kept constant (by current control on ac side)

Change in duty ratio d^* ⇨ Change in P_{array} ⇨

Change in output power of converter ⇨

Change in value of I^*_{peak} (current command of inverter)

IF :

d^* maximizes I^*_{peak} ⇨ MPP

DC-Link Capacitor Droop Voltage

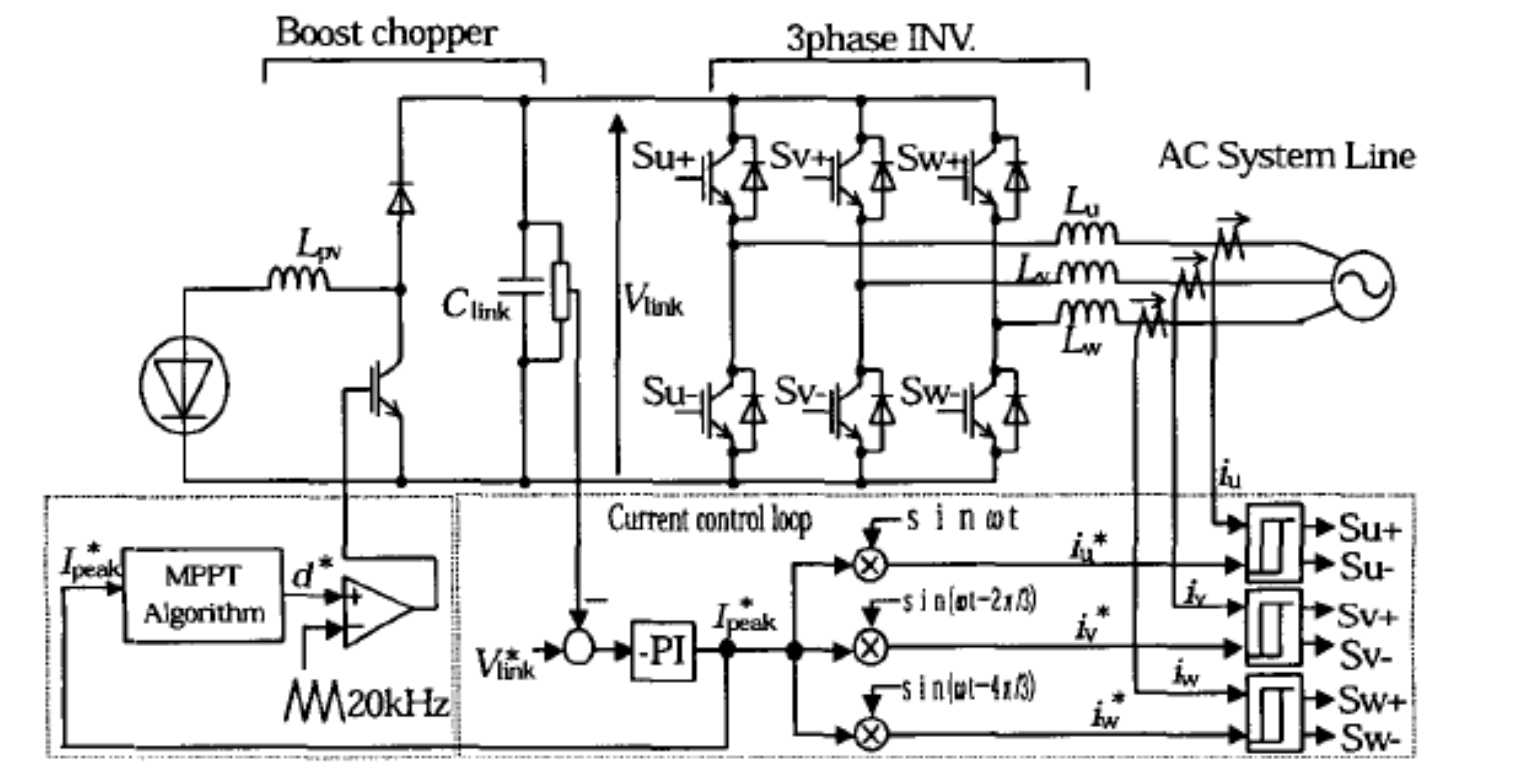

DC-Link Capacitor Droop Voltage

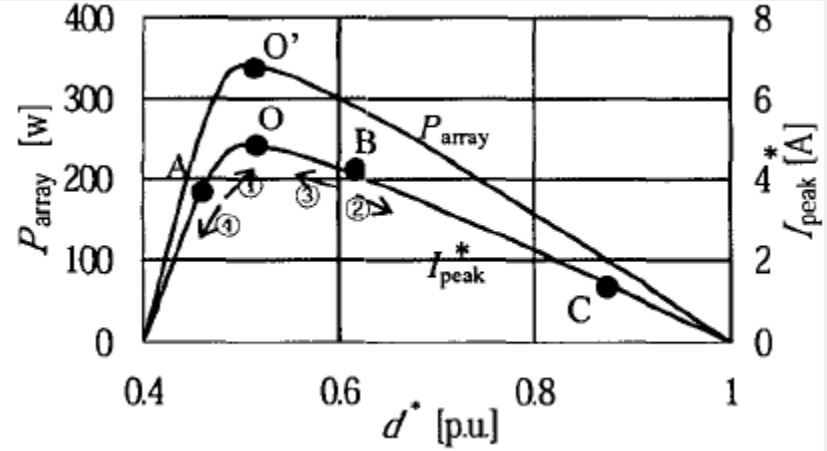

Operating direction of d* in MPPT control :

Operating Points in Fig.3	Current States		Operating direction of d^*
	$\dot{I}_{peak}{}^*$	d^*	
①	Positive	Increasing	Hold on
②	Negative	Increasing	Turn over
③	Positive	Decreasing	Hold on
④	Negative	Decreasing	Turn over

DC-Link Capacitor Droop Voltage

The ac system line current is fed back to prevent V_{link} from drooping and d is optimized to bring Ipeak to its maximum, thus achieving MPPT.

❖DC-link capacitor droop control does not require the computation of the PV array power.

❖Its response deteriorates when compared to a direct method.

❖Can be easily implemented with analog operational amplifiers and decision-making logic units.

Maximum Power Point Tracking Methods

MPPT Methods

- P&O (Perturbation in the Operating voltage)
- Increment Conductance
- Fractional Open-Circuit Voltage
- Fractional Short-Circuit Current
- Fuzzy Logic Control
- Neural Network
- RCC (Ripple Correlation Control)
- Current Sweep
- Load Current or Load Voltage Maximization
- DC-Link Capacitor Droop Voltage
- **dP/dV or dP/dI Feedback Control**

dP/dV or dP/dI Feedback Control

1. Reading voltage and current of the array

2. compute the slope (dP/dV or dP/dI) of the PV power curve (DSP or microcontroller)

3. feed the slope back to the power converter with some control to drive it to zero.

Computing the slope:

• dP/dV is computed and its sign is stored for the past few cycles.
Based on these signs, the duty ratio of the power converter is either incremented or decremented to reach the MPP.

dP/dV or dP/dI Feedback Control

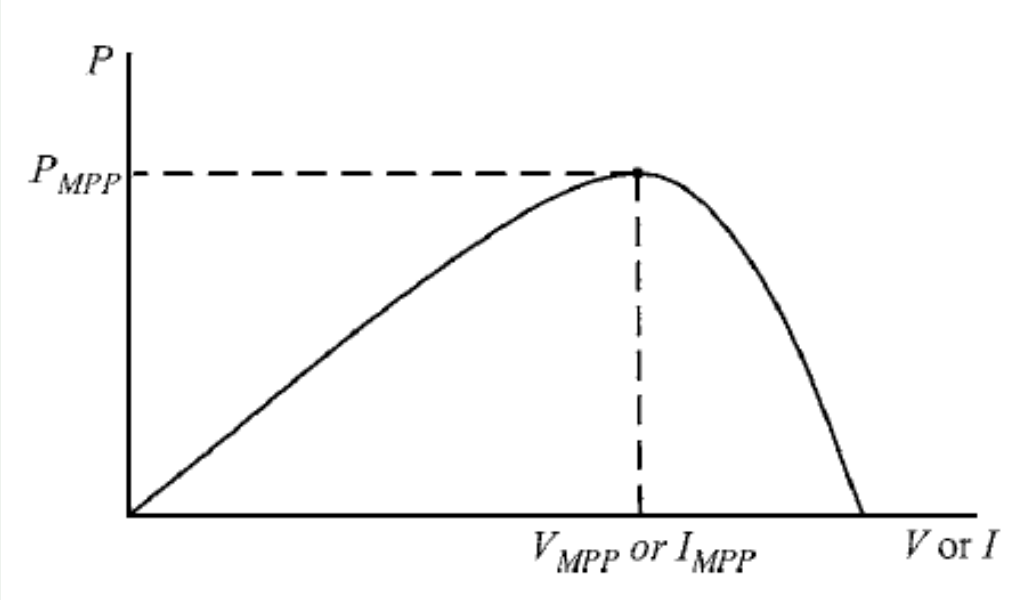

$$\begin{cases} dP/dV = 0, & \text{at MPP} \\ dP/dV > 0, & \text{left of MPP} \\ dP/dV < 0, & \text{right of MPP.} \end{cases}$$

dP/dV or dP/dI Feedback Control

- Sampling and data conversion are used with subsequent digital division of power and voltage to approximate dP/dV. dP/dI is then integrated together with an adaptive gain to improve the transient response.

- The PV array voltage is periodically incremented or decremented and $\Delta P / \Delta V$ is compared to a marginal error until the MPP is reached.

Other MPPT Techniques

✓ **State-based MPPT**

System is represented by a state space model.

A nonlinear time-varying dynamic feedback controller is used to track the MPP.

- Robust
- Insensitive to changes in system parameters
- MPPT is achieved even with :

1) Changing atmospheric conditions

2) In the presence of multiple local maxima caused by partially shaded PV array or damaged cells

Other MPPT Techniques

✓**Single-Stage Inverter**

Performs:

1) MPPT

2) Output current regulation for utility grid distribution

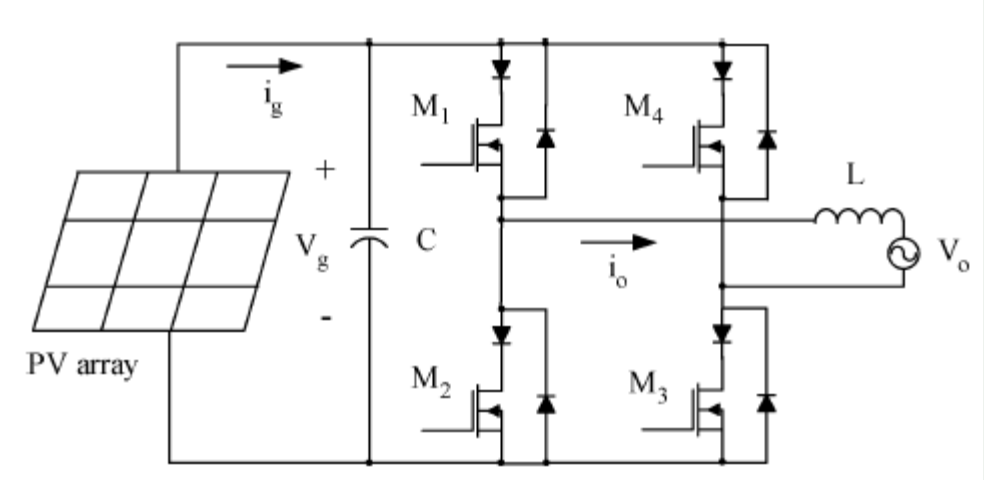

Other MPPT Techniques

Based on the voltage of the PV array, one-cycle control (OCC) is used to adjust the output current of the single-stage inverter such that MPPT is attained.

The control circuit consists of discrete digital components or DSP

•The slight discrepancy is due to the inability of the controller to account for temperature variation.

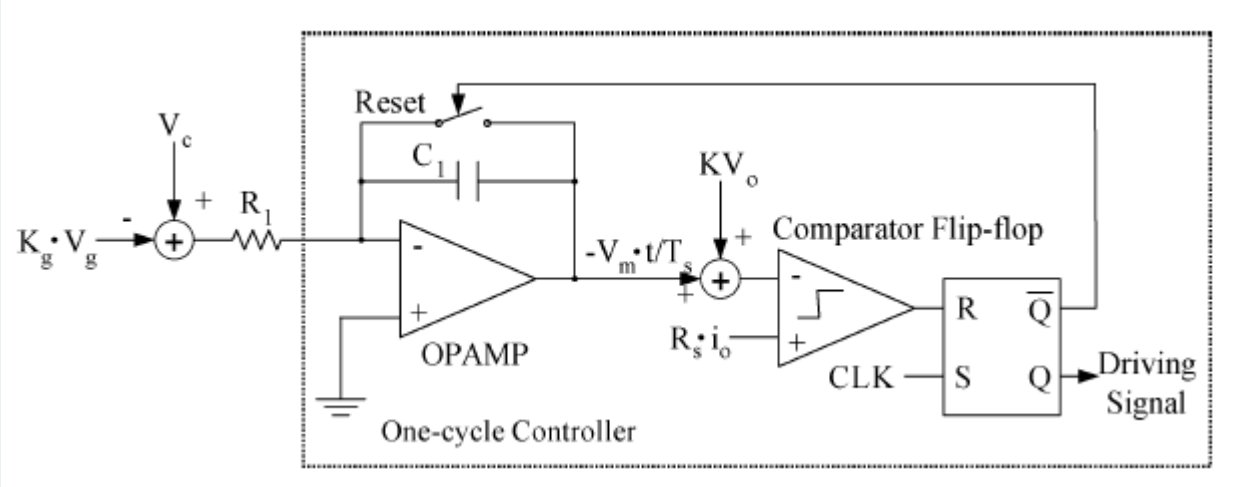

Other MPPT Techniques

✓**Best Fixed Voltage (BVF) :**

Statistical data is collected about irradiance and temperature levels over a period of one year.

BFV representative of the MPP is found.

The control sets:
operating point of array /BFV or
output voltage/nominal load voltage.

- Operation is therefore never exactly at the MPP
- Different data has to be collected for different geographical regions.

Other MPPT Techniques

✓**Linear Reoriented Coordinated Method (LRCM) :**

The PV array characteristic equation is manipulated to find an approximate symbolic solution for the MPP.

V_{oc} , I_{sc} and other constants representing PV array characteristic curve are needed.

• The maximum error in using LRCM to approximate the MPP was found to be 0.3%, but this was based only on simulation results.

Choosing a MPPT Technique

A. Implementation :

Ease of implementation: Depends on user's knowledge

Analog : fractional I_{sc} fractional V_{oc} RCC

Load current or voltage maximization

Digital : P & O IncCond Fuzzy Logic Control

Neural Network dP/dV or dP/dI Feedback Control

❖*Some MPPT techniques only apply to specific topologies :*

DC-link capacitor droop control

OCC works with single-stage inverter

Choosing a MPPT Technique

B. Sensors :

The number of sensors required to implement MPPT affects the decision process.

Measuring voltage :	Easier	More reliable
Current sensors:	Expensive	Bulky

Problem : systems that consist of several PV arrays with separate MPP trackers.

Sensors to measure irradiance level : hard to find

Choosing a MPPT Technique

C. Multiple Local Maxima :

Partial shading of PV array ⇒ Multiple local maxima

Considerable power loss can be incurred if a local maximum is tracked instead of the real MPP.

Current sweep
State-base method
} Track MPP correctly in presence of local maxima

Other methods :

need additional initial stage to bypass the unwanted local maxima and bring operation to close the real MPP

Choosing a MPPT Technique

D. Costs :

Cost comparison:

- Analog or Digital ⟶ Analog is generally cheaper
- Whether the technique requires software or programming
- Number of sensors ⟶ No current sensor ⟶ Cost ↓

Choosing a MPPT Technique

E. Application :

Different MPPT techniques will suit different applications.

- Space satellites/Orbital stations

Costs and complexity — Not important

Performance and reliability — important

MPPT
1) continuously track the true MPP in minimum time
2) should not require periodic tuning.

Appropriate methods : P&O IncCond RCC

Choosing a MPPT Technique

➢Solar vehicles

Mostly require fast convergence to the MPP.

•Load in solar vehicles consists mainly of batteries

Options : Fuzzy logic control Neural networks RCC

Load current or voltage maximization

Choosing a MPPT Technique

- Residential Areas :

The goal is to minimize the payback time.

⇨ Essential to constantly and quickly track the MPP.

Partial shading ⇨ MPPT should be capable of bypassing multiple local maxima.

Options : Two-stage IncCond RCC

Choosing a MPPT Technique

- Street lighting :

PV systems used for street lighting only consist in charging up batteries during the day.

⇨ They do not necessarily need tight constraints;

Important factors : Easy Cheap

Options : Fractional V_{oc} Fractional I_{sc}

MPPT Technique	PV Array Dependent?	True MPPT?	Analog or Digital?	Periodic Tuning?	Convergence Speed	Implementation Complexity	Sensed Parameters
Hill-climbing/P&O	No	Yes	Both	No	Varies	Low	Voltage, Current
IncCond	No	Yes	Digital	No	Varies	Medium	Voltage, Current
Fractional V_{OC}	Yes	No	Both	Yes	Medium	Low	Voltage
Fractional I_{SC}	Yes	No	Both	Yes	Medium	Medium	Current
Fuzzy Logic Control	Yes	Yes	Digital	Yes	Fast	High	Varies
Neural Network	Yes	Yes	Digital	Yes	Fast	High	Varies
RCC	No	Yes	Analog	No	Fast	Low	Voltage, Current
Current Sweep	Yes	Yes	Digital	Yes	Slow	High	Voltage, Current
DC Link Capacitor Droop Control	No	No	Both	No	Medium	Low	Voltage
Load I or V Maximization	No	No	Analog	No	Fast	Low	Voltage, Current
dP/dV or dP/dI Feedback Control	No	Yes	Digital	No	Fast	Medium	Voltage, Current
Array Reconfiguration	Yes	No	Digital	Yes	Slow	High	Voltage, Current
Linear Current Control	Yes	No	Digital	Yes	Fast	Medium	Irradiance
I_{MPP} & V_{MPP} Computation	Yes	Yes	Digital	Yes	N/A	Medium	Irradiance, Temperature
State-based MPPT	Yes	Yes	Both	Yes	Fast	High	Voltage, Current
OCC MPPT	Yes	No	Both	Yes	Fast	Medium	Current
BFV	Yes	No	Both	Yes	N/A	Low	None
LRCM	Yes	No	Digital	No	N/A	High	Voltage, Current
Slide Control	No	Yes	Digital	No	Fast	Medium	Voltage, Current